Magnetic Levitation Experiments for a Control Systems course in an Electrical Engineering Technology Program

by

Albert Lozano-Nieto, Ph.D.
Engineering Technology and Commonwealth Engineering
The Pennsylvania State University Wilkes-Barre
Lehman, PA 18627
a-lozano@psu.edu

Abstract. A low cost magnetic levitation system is used for a portion of the experimental part of a Control Systems course in an Electrical Engineering Technology program. Students have the opportunity to evaluate the performance of the system in order to relate their findings to the concepts described in the lecture portion of the course. Students are also asked to characterize the different components that make up the system giving them an in-depth overview of their interaction. The paper describes the experimental approach used in this course as well as recommendations for implementation in similar programs.

I. Introduction

The course *EET 433 Control Systems: Analysis and Design* is part of the curriculum for the baccalaureate degree in electrical engineering technology at the Wilkes-Barre campus of the Pennsylvania State University. The goal of this course is to give students an understanding of the basic concepts related to control systems, in particular the dynamic response of systems and concepts of stability among others. Through the experience in teaching this course for several years, the author has noticed that because of the mathematical concepts used to describe the dynamic response of systems, students tend to focus on these concepts rather than acquiring a broad vision of the concepts related to control systems. Engineering technology students benefit from intense and meaningful experimental activities in this type of courses. This gives them the necessary technical skills and perspective to complement the concepts developed in the course

lectures. Simulation packages are routinely used by some similar academic programs as a method to incorporate experimental learning in this type of courses by simulating the behavior of complex systems. However, although useful, simulation activities by themselves are not enough to give students a solid understanding of the complexities and variables that must be considered when dealing with dynamic systems. They may also contribute to make students lose some perspective of reality.

With the premise of exposing students to experimenting with a real control system, the author has incorporated a set of experiments based on a magnetic levitation system. Magnetic levitation systems have been extensively used as experimental demonstrations of control systems either by themselves (Wong, 1986) or by using a mixture of hardware experiments and software simulations (Shiakolas, 2003). This paper describes the experimental activities developed by the author that have a strong focus on characterizing and understanding the different signals generated by the different parts of the control system and how they flow and interact with the different components that make up the system. Because of the nature of the program in electrical engineering technology, these experiments also have a strong focus on the electrical characterization of the different components used by the system.

II. The Magnetic Levitation System

The magnetic levitation system used in these experiments is based on a design from Guy Marsden, available in the form of kits. This system, shown in figure 1, is extremely simple and has been used at other academic institutions for similar educational purposes (Lundberg, 2004). It is based on modulating the current flowing through an electromagnet that in turn, changes the magnetic field that is generated. The feedback loop is closed by a Hall effect sensor that produces a voltage proportional to the distance between the sensor and the object being levitated. This requires the levitated object to be a magnetic object. In our case, as shown in figure 1, we have glued a neodymium magnet to an empty film canister. This also allows students to change the weight of the levitated object very easily, by filling up the canister with objects of different weight.

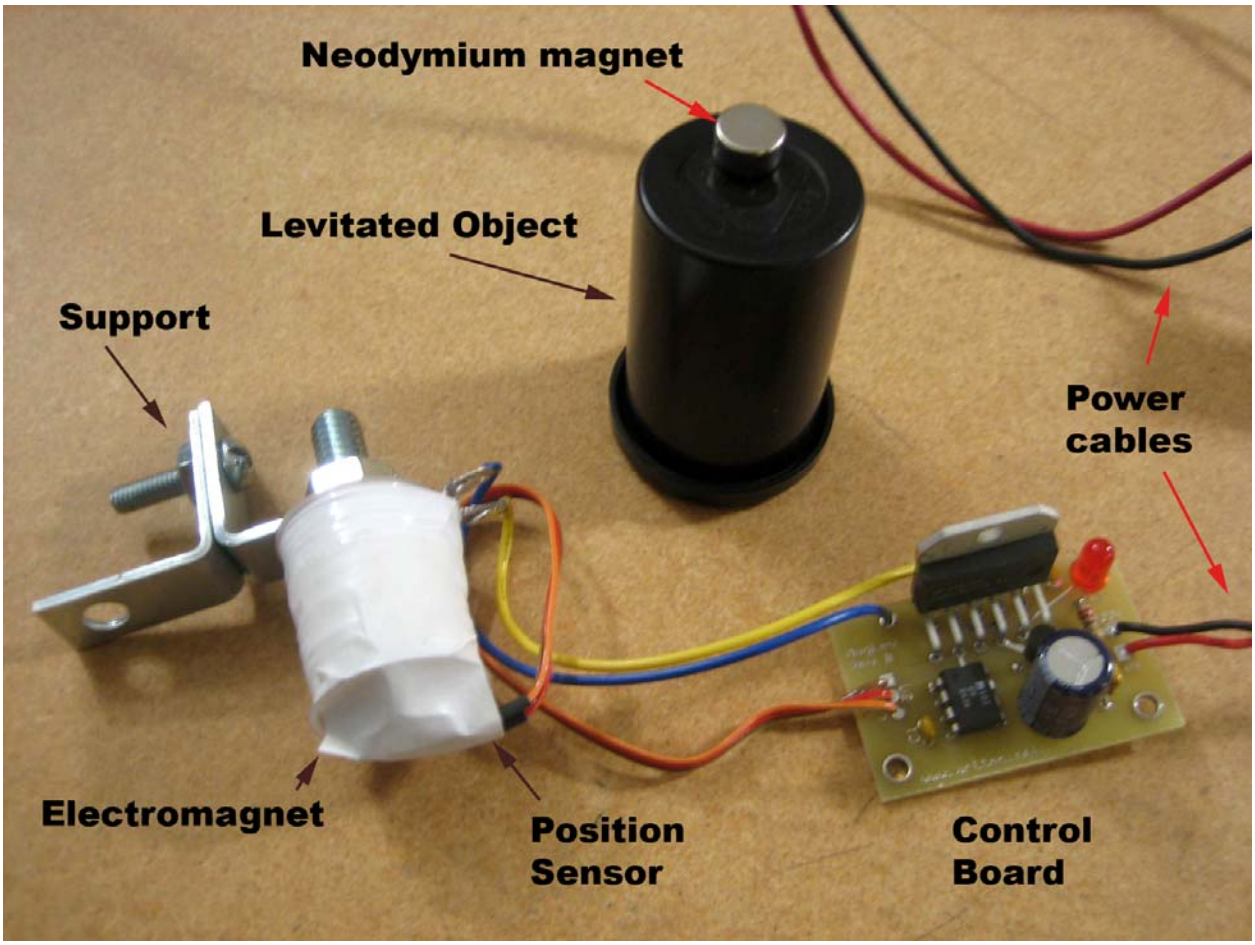

Figure 1. Magnetic Levitation System

One of the main drawbacks from this system, as reported by those who have built it before, is its marginal stability. Even in the absence of external perturbations, the levitated object tends to oscillate, ending up either attached to the electromagnet of dropping to the ground. In its original configuration, the system is at its best, marginally stable. Moreover, the system is inherently non linear due to the nonlinearities associated to its magnetic field and therefore it is difficult for the students to predict how it will respond to specific changes (Craig, 1998). These apparent drawbacks, however, become the pivotal point of using this system in an educational setting. Students can learn to recognize the onset of instability in a system, evaluate the different parameters that have an effect on that instability and more importantly, design different compensation approaches and evaluate their performance.

III. Magnetic Levitation Experiments

The experiments on magnetic levitation are divided into three different parts. Students have to complete each part in a single lab session lasting three hours. The first part is focused on studying the system as a whole, on evaluating the global performance of the magnetic levitation system and on understanding the range operation of the system as well as its limitations. The second part studies in depth the different electronic components used to create the magnetic levitation system. In this part, students characterize the position transducer, the pulse-width modulator control, the H-drive to drive the electromagnet and the electromagnet itself. The third and final part draws from the concepts learned in the first two parts in which students learned the limitations of the system and had a good knowledge of how it operates and interacts with the other components. In this third part, students are asked to design, build and incorporate a network in the feedback path in order to improve the performance of the system and improve in some of its limitations.

By dividing the approach to understanding the system in three different areas, students are able to have clearly defined goals for each part in a way that replicates the approach to understanding complex systems: the basic knowledge of the system, characterizing its limitations and understanding the different parts that make up the system are stepping stones towards improving the performance of the system. The following sections describe in more detail each one of these three laboratory experiences.

III. a Magnetic Levitation System Experiments Part 1: System Operation and Evaluation

The goal of this initial part is for the students to understand recognize the behavior and limitations of the control system by experimentation after it has become operational. Students are advised on an initial weight for the object to be levitated as well as an initial gap between the

object and the sensor and then asked to change these parameters and record their results. The following are examples extracted from the experimental outline:

- Hold the levitated object with your hand beneath the electromagnet at a distance of 2 cm to 3 cm. At this point you should feel a slight push or pull that is the result of the interaction between magnetic fields.

- Try to let the levitated object go very gently so you don't bump it up, down or sideways. If it pulls and sticks to the coil, you should add more weight to the canister; if it falls down, try to remove some weight or the second magnet. You may see the levitated object to oscillate over the set point before it stabilizes or falls down.

- If the control system continuously pulls the levitated object away, try reversing the polarity of the magnet in the levitated object of the position of the sensor or both. Eventually, one of these combinations will be correct.

- What is the range of weight in the levitated object for the system to work correctly?

- What is the range of air gap between the electromagnet and the levitated object?

After the system is working correctly and students have an understanding of the weight range for the object to be levitated and the actions that can bring the system into an unstable situation, they can then proceed to take some measurements in the system. These are the variables to be measured:

- *Measure the current being drawn by the system in these situations: levitated object stable, levitated object oscillating and no levitated object.*

- *Sketch the waveform at the output of the Hall effect sensor (position sensor). Comment on the changes in this waveform when the levitated object is in a stable position, while it is oscillating and when there is no object.*

- *Sketch the waveform at the output at the PWM modulator. Measure the frequencies of the signal in these conditions, duty cycle and other parameters that are deemed to be important.*

Once these measurements are taken, students should be able to explain how the control system operates from the point of view of the signals involved in its different parts. They should also be able to understand and explain how the system reacts when there is a perturbation introduced in the system as well as the limits in this perturbation that will result in the system not being able to levitate the object correctly.

III. b Magnetic Levitation System Experiments Part 2: System Characterization

After having evaluated the properties and performance of the system, students move to the second part of the laboratory experience. This part is focused on studying in depth the different electronic components that make up the magnetic levitation system. It is important to keep in mind that this course is part of the curriculum in a baccalaureate degree in electrical engineering technology and therefore students in the program must have a deep understanding of the different electronic components being used. We also use this opportunity to introduce the students to new devices such as the Hall effect sensor as well as the integrated circuits used for the pulse-width modulator and the H-bridge to drive the electromagnet.

Characterizing the Hall effect sensor.

The Hall effect sensor used in the magnetic levitation system is the Honeywell SS490 Series. These are 3-pin devices that look like a small signal transistor. The three pins are: Voltage Supply, Ground and Output Signal. Students are given the specifications of this and the rest of the components used in the system and are first asked to answer questions by reading and

understand these specifications. Students start this part by measuring the voltage at the output of the sensor in the absence of a nearby magnetic field in order to obtain a baseline value. Afterwards, students measure the voltage at the output of the sensor obtained by placing a magnet, similar to the magnet used in the system, at different distances from the sensor, from both sides. With this information they are required to express in a graphical way the relationship between the voltage measured by the Hall effect sensor and the distance between the magnet and the sensor. They are asked to compare their results against the graphs given by the manufacturer of the sensor as well as the data they collected in the previous experiment.

Finally, students are asked to repeat some of the previous measurements at different values of the voltage supplied to the sensor in order to study the dependence of the readings given the sensor with the voltage supplied to the sensor.

Characterizing the PWM circuit

The PWM control of the magnetic levitation system is based on a MIC502 integrated circuit from Micrel. Although this chip was specifically designed for fan management in power supplies, it is suitable to generate the control signals in the magnetic levitation system. Once again, the first step in the student work is for them to acquire, read and understand the specifications of this integrated circuit given by the manufacturer as they will need them to complete several parts of this experience.

To characterize the MIC502 students build the circuit shown in figure 2. This is a very simple circuit in which the output is a pulse-modulated signal in response to the voltage signal present at the input.

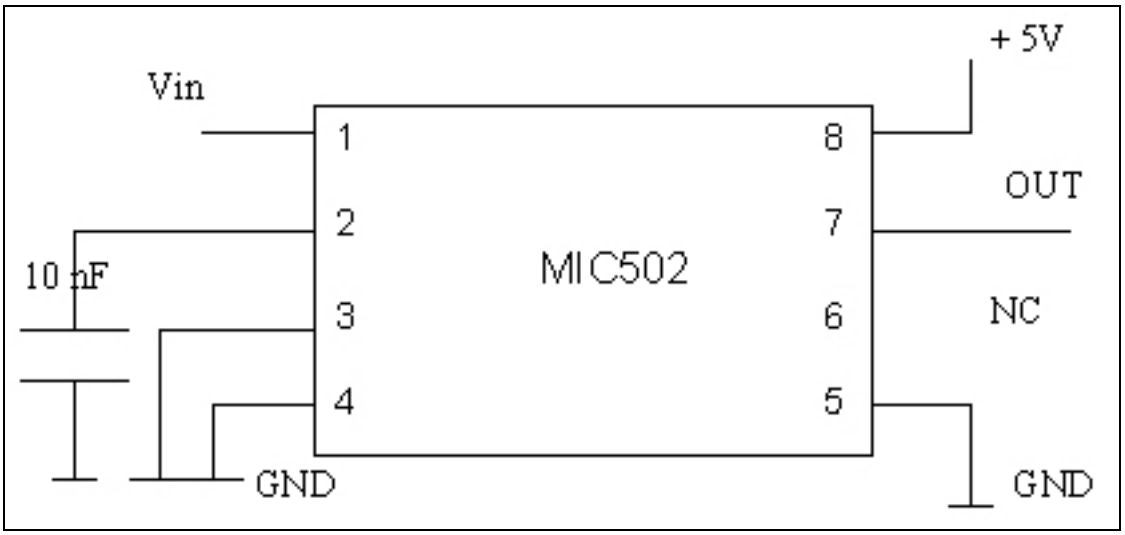

Figure 2. Circuit to characterize the pulse width modulator

Using this circuit, students are asked to respond to the following questions:

- *Based on the specifications for this circuit, what is the voltage needed at the output to generate a signal with a 50% of duty cycle?.*
- *Inject a DC signal with the value found in the previous part into the input of the MIC502. Measure the frequency and the duty cycle of the signal at the output. If the duty cycle is different from 50%, investigate the possible causes for this discrepancy.*
- *Evaluate the input voltages that will cause duty cycles at the two extremes (lowest and highest) for the output maintaining the same frequency.*
- *Based on the specifications of the integrated circuit, redesign it for the output signal to have a frequency of 2 kHz. Inject the same DC input voltages as before. Is the duty cycle the same as measured in the first part?*

Characterizing the H-bridge and the electromagnet

The last part in this laboratory experience is the characterization of the H-bridge that drives the electromagnet. The H-bridge is the LMD18201 from National Instruments. This is a 3 A, 55 V H-bridge originally marketed for motion control applications. To dissipate the heat generated by the currents driving the H-bridge, it is recommended to use a heat sink. The pitch between pins

in this chip is different from the standard pitch used in breadboards; therefore it is necessary to do some preparation before the experiment by using a breakout board that will convert the pitch to the standard 0.1" used on the breadboards.

This part also starts by asking students to gather and read the specifications for this integrated circuit as they are necessary to respond to some of the questions, such as a description of how the system operates and what is the meaning of the thermal flag in this chip and how to use it. Students are then asked to build the circuit shown in figure 3 that will simulate the power part of the magnetic levitation system:

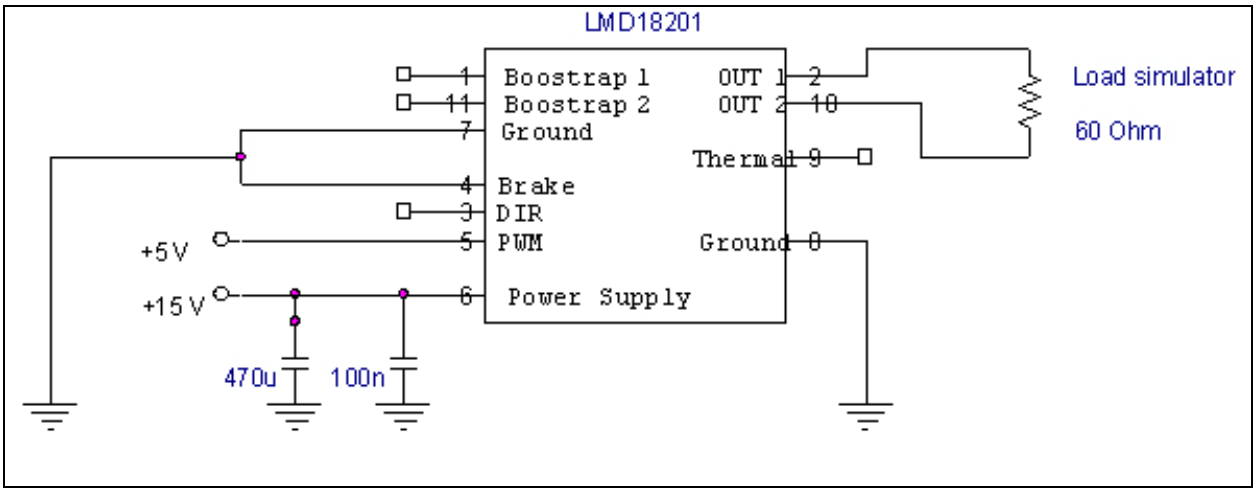

Figure 3. Circuit used to characterize the H-bridge

In order to facilitate the measurements by the students, the original electromagnet has been substituted by a 60 Ω power resistor rated at the adequate amount of power. Students are asked to measure the amount of current flowing through the simulated load when the DIR input is both, high and low. Students must realize that they have to use a digital multimeter for these measurements as none of the load terminals is grounded. Based on these measurements, they can now predict how the system will react depending on the output of the pulse width modulator.

III.c. Magnetic Levitation System Experiments Part 3: System compensation

The goal of the third part in the magnetic levitation system is for students to evaluate the effects of different compensation network on the overall performance of the system. The experience begins by asking the students to use the parts from the characterization experiment in order to build the magnetic levitation system on their breadboard as shown in the schematic in figure 4. The system built this way should have the same performance as the system used in part 1, the only difference being that now they can modify the connections as needed, add new components, etc., in a very easy and simple manner.

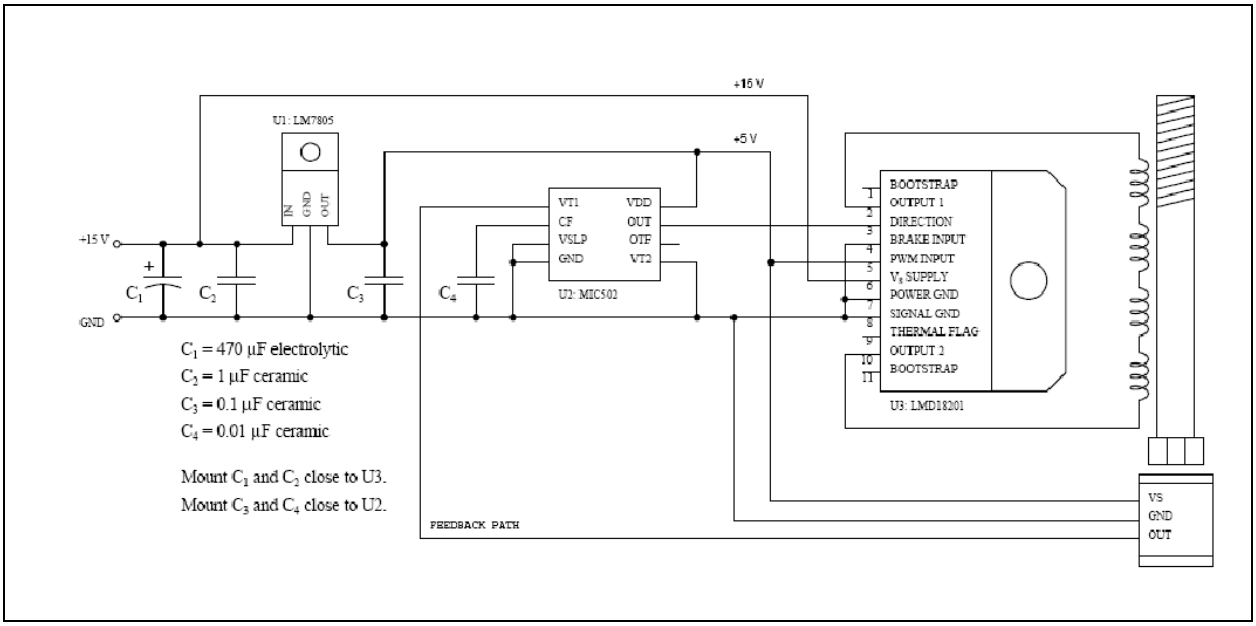

Figure 4. Full schematic of magnetic levitation circuit.

The two critical signals in the whole system are the signals observed at the output of the Hall effect sensor and the signal at the output of the PWM chip. In this part, students must observe and record these signals in different situations (object levitating, no object levitating, etc.) in order to understand how they change depending on these conditions. In measuring and recording these signals, students should recognize the presence of strong high-frequency interference that results in degrading the performance of the system. One of the most commonly used methods for eliminating high frequency interference is the use of capacitors in order to create paths to ground for the interfering signals. Under the guidance of the instructor, students are asked to

connect capacitors at critical points in the circuits and observe the changes in the two signals of interest. Data sheets and applications notes from the manufacturers of the integrated circuits normally indicate the use of decoupling capacitors at critical points to improve their performance. This experience can serve to show the students the real effect of using them in a practical situation. In addition to cleaning the signals in the circuit, students should observe that when adding the correct capacitors and the correct locations, the oscillations in the levitated object decrease and therefore the stability of the system is improved. At the end of this part of the experiment, students should have identified the best locations to insert capacitors as well as a range of values to produce the optimum results

A common technique to improve the stability of any system is the use of the appropriate compensated networks, normally in the feedback path. Although the formal study and design of compensation networks is beyond the scope of this course, students can now evaluate the performance of one of these networks on the magnetic levitation system. This is achieved by building the circuit shown in figure 5 developed as a solution to the problem of stabilizing this system in the 6.302 course (Feedback systems) at the Massachusetts Institute of Technology (MIT).

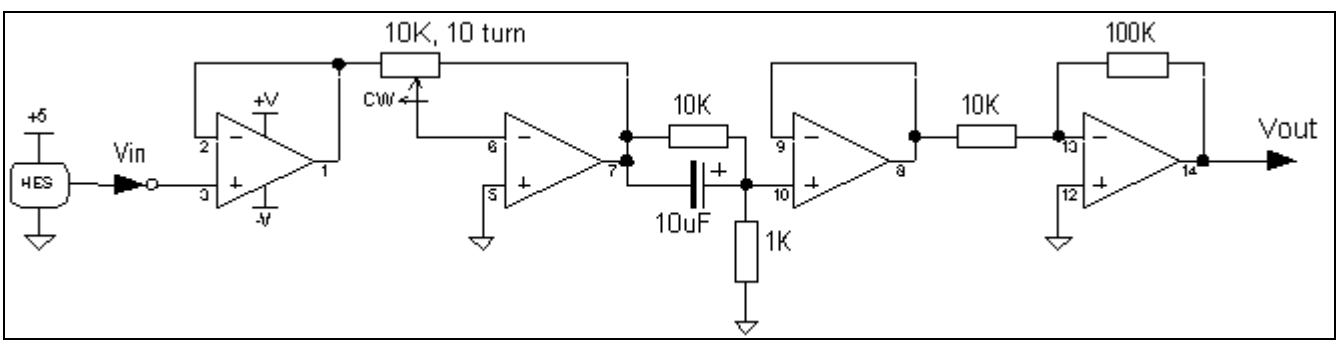

Figure 5. Example of compensation network

As shown in the figure, this network is connected between the output of the Hall effect sensor and the input pin in the PWM circuit. However, before connecting the network, students are asked to analyze it and evaluate the network. In particular, students have to find the transfer function for the circuit and the location of its pole(s) and zero(s). They are asked to plot both, the

magnitude and phase of the transfer function. After they have calculated the theoretical response of this network, they can verify it experimentally. As they have already calculated the frequencies of interest, they should choose the range of frequencies that need special attention when finding the transfer function of the network experimentally.

After characterizing the network both theoretically and experimentally, students move to introducing the compensation network in the magnetic levitation system. This compensation network is connected between the output of the Hall effect transducer and the input to the PWM chip. Students are instructed to initially set the value of the potentiometer for the overall low frequency gain to be equal to 1.

With the compensation network in the loop, students should observe the system behaving in a manner similar to what they observed in the first part of the experiment. That is, with the potentiometer setting the low frequency gain at one, the compensation network is transparent from the point of view of the system. By slightly modifying the low frequency gain of the compensation network, students can experiment with the effects of changing the gain on the performance of the levitation system. They should find a value of the gain that results in an increase in the stability of the levitated object, decreasing the oscillations that lead it into an unstable situation.

In the event that students have trouble reaching a stable behavior for the system, they are given some help on how to proceed to troubleshoot the system. For example, while keeping the gap between the electromagnet and the levitated object at a correct distance, they can change the value of the potentiometer slowly until they feel that the object has locked into the system and it is levitating. Another possible way to proceed is to slightly modify the value of the resistance in parallel with the 10 μF capacitor, in order to modify the transfer function of the compensation network.

After the compensation network is working correctly, and the stability of the magnetic levitation system has improved, students are then asked to repeat the procedures they did with the first part in the set of experiments. They can then evaluate the range of the system in terms of weight for

the levitated object, maximum allowable gap between object and electromagnet and how it responds to external disturbances. The results of these experiences should indicate an increase in the range of weights and gap in the system as well as a dampening of the oscillations when an external disturbance is introduced in the system. Students can now understand the effect of the external compensation network on the overall performance of the system.

IV. Observations and Feedback from student work

IV. a Part 1: System operation and evaluation

The feedback received from the students after doing the first part of the magnetic levitation system indicates that they enjoy working in this laboratory experience. They specifically value working with a complete system opposed to specific circuits as it happens in most courses.

The personal observations from the instructor indicate that the main difficulties for the students are in the initial part of the experience when they had to set up the system and verify it was working correctly. Students did not have excessive problems at the time of making measurements in the system as they are used to these tasks and are able to handle them correctly. One of the problems that the magnetic levitation system brings is that the signals are the output of the Hall effect transducer as well as the PWM circuit are extremely noisy, making it difficult to obtain reliable data. This is inherent to the design of the circuit as the magnetic field generated by the electromagnet interacts with the Hall effect sensor. This is especially difficult for the students as in regular electronics lab, the signals that they measure are relatively clean and easy to visualize on the oscilloscope. However, this potential problem can be turned into a teaching moment, explaining to the students that there is a difference between academic circuits and real circuits, as well as explaining to them that in some cases it is necessary to measure signals in an extremely noisy environment. The instructor can then show some techniques to reduce the amount of noise. For example, it is possible to use the averaging function that most digital oscilloscopes incorporate as a tool to reduce the noise on the screen. Students can then experience with the tradeoffs between the number of samples averaged and how fast the display

is updated. In any case, for some students, this is the first exposure to real, noisy signals as well as to even the simplest noise techniques.

Students also show a good understanding of how the whole control system operates being able to sketch a basic yet correct block diagram for the system. They are also able to indicate the feedback signals that are present at the different parts of the system.

IV. b. Part 2: System characterization

Students do not seem to have excessive problems to complete the activities outlined in part 2 in the time allotted. They are used to experimental work based on characterizing different electronic components in other courses.

There were no major difficulties observed when the students were characterizing the Hall effect sensor. Once they became familiar and used to how it operates, they were able to complete its characterization. The instructor of this course also noted that after he introduced these experiences in this course, students also started to use Hall effect sensors in their senior design projects in situation in which this was feasible. This stresses the importance of exposing students to the use of different electronic components and transducers as part of their education. Similar observations happen at the time of characterizing the modulator and the driver to the electromagnet. Moreover, the answers to the questions that required evaluating the specifications of the semiconductors indicate that students have read and understand them.

IV. c. Part 3: System Compensation

The direct observations from the instructor of the course indicate that students have trouble completing this part of the laboratory experience. It seems that they spend most of the time building the circuits for the magnetic levitation system first and then the circuit for the compensation network. It is not uncommon that some errors in the wiring by the students lead to

having to spend additional time troubleshooting common wiring connection errors in detriment of experimenting with the properties of the compensation network. On the other hand, we believe that making the connections between the different parts will help students to understand how the different signals are transferred.

A compromise solution that will be used in the next offering of this course is that while students will still have to build the magnetic levitation system from the schematic given to them, they will be supplied with the circuit for the compensation network. This will free up the amount of time that they spend in building and troubleshooting the network. The instructor of the course will also emphasize the need for the students to do as much work ahead of time as possible, specifically calculating the transfer function of the compensation network. While students have the laboratory outlines available to them ahead of time and are expected to read them in advance, making a special emphasis on the need to do that for this specific laboratory part, may have a stronger impact on them.

The main problem with spending a lot of time troubleshooting their connections is that this does not leave enough time for students to experiment with the various settings of the compensation network and therefore they cannot fully appreciate the benefits that the network introduces.

The magnetic levitation system used in these experiments is based on using only proportional control and therefore its stability is marginal. An optimal method to improve the stability of this system would be to change its control mode to proportional-integrative-derivate (PID). However, the study of the different control modes is not the object of this course.

V. Potential Improvements

As mentioned in the previous section, the last section of the magnetic levitation experiences can be changed in order to improve the student experiences. Depending on the time available and the skill of the students in building and troubleshooting circuits, students can build the whole system including the compensation network or they can be provided with one or the two circuits already

built. At this point it is necessary to mention that the course in which this experiment was carried out did not cover the study of the different approaches for designing compensation network in control systems. This forced us to design the experiments providing the students one specific compensation network. Similar courses that include the student of compensation networks can benefit from having the students experiment with the design and use of several compensation networks in order to verify which ones offer the best performance for this system.

One of the main problems observed with this system is that the level of electromagnetic interference generated by the electromagnet affects the effectiveness of the positioning system. Therefore, it is not possible to characterize the oscillation frequency nor the damping ratio of the system by observing the waveforms generated at the output of the Hall effect sensors as they are highly contaminated. Because the course puts a strong emphasis on these two parameters, it would be extremely beneficial for the students to be able to experimentally determine them. A possible solution without changing the system nor its positioning sensor is to use an external circuit, for example an ultrasonic or an optic detector to determine the position of the levitated object. By measuring the signal detected at the output of such circuit, it is then possible to determine the oscillation frequency and damping that the levitated object is experiencing. This, in turn, will allow students to better characterize the dynamic response of the system using the standard tools that they have learned in the classroom. An alternative to using a Hall effect sensor that is susceptible to the magnetic interference from the electromagnet is to use a light positioning sensor, making it immune to this interference (Hurley et al., 2004).

A possible alternative to using a hardware-based compensation network would be to use a microcontroller in the feedback loop that would effectively change the dynamic response of the system in order to provide the most stable response.

VI. Conclusion

This paper has described a set of experiments using a magnetic levitation system suitable to be incorporated in a control systems course. The activities described in the paper challenge the

students forcing them to focus their attention to the subject matter and study deeper some of the concepts in the course. At the same time, however, students find these activities fun and extremely interesting as they move away from the computer simulations traditionally used in most courses.

The range of benefits from the experimental activities described in this course goes beyond control system. When performing these experimental activities, students are exposed to new transducers and integrated circuits commonly used in industry. This gives them not only the opportunity to use these integrated circuits but also to increase their skills at the time of reading their data sheets, specifications, application notes and other literature provided by the manufacturer.

Finally, it is also important to note that observing an object levitating attracts the attention of most people, finding it somehow magical, mysterious and fascinating. Therefore the system described in this paper is ideal to use in demonstrations, open houses and other outreach activities for the general public. Having the students performing the demonstrations and explaining how the system operates further increases the impact of the magnetic levitation system.

References

Craig, K., Kurfess, T. and Nakurka, Mark. (1998). Magnetic levitation testbed for controls education. Proceedings of the ASME Dynamic Systems and Control Division, 83-88.

Hurley, W., Hynes, M. and Wolfle. W (2004): PWM control of a magnetic levitation system. IEEE Transactions on Education, 47, 165-173.

Lundberg, K. Lilienkamp, K. and Marsden G. (2004). Low-cost magnetic levitation project kits. IEEE control systems magazine, 65-69.

Guy Marsden, http://www.arttec.net/Levitation/index.html

Shiakolas, P. and Piyabongkarn, D. (2003) Development of a Real-Time Digital Control System with a Hardware-in-the-Loop Magnetic Levitation Device for Reinforcement of Controls

Education. IEEE Transactions on Education, 46, 79-87.

Wong, T. (1986) Design of a magnetic levitation control system – an undergraduate project. IEEE Transactions on Education, 29, 196-200.

Biographical Sketch Albert Lozano-Nieto is Professor of Engineering at Penn State Wilkes-Barre teaching in its Baccalaureate degree in Electrical Engineering Technology. Dr. Lozano-Nieto research interests are focused on bioelectrical impedance measurements, education in Radio Frequency Identification (RFID) systems and evaluating methodologies for improving education in electrical engineering technology.